CHAPTER II
BACKGROUND AND LITERATURE SURVEY

2.1 Pinch Technology

Pinch technology, formed by Bodo Linnhoff in 1978, is a systematic methodology for analyzing energy usage and energy saving in the processes and total sites. It considers the chemical processes as a series of streams requiring heating and cooling and is based on the first and second laws of thermodynamics. The applications of these techniques are heat exchanger network optimization, unit to unit heat integration, utility optimization, total site energy optimization, distillations column targeting and emission targeting. The applications of pinch technology can provide the design engineer with the insight needed to evaluate complete process system designs.

Furthermore, the technique of pinch enables energy-saving opportunities to be identified while remaining energy efficiency and minimizing capital expense, which is suitable for study in energy management and energy audits. The energy audit is a study of the net energy consumption in each unit, including the common utility and power/cogeneration units.

The pinch technology is based on laws of thermodynamics which describe the important point as follows;

The First Law states that the heat transferred from the hot stream must equal that transferred to the cold stream. Therefore, of the six process variables (two flow rates and four temperatures), only five can be specified independently.

The Second Law states that heat can only be transferred from a hot fluid to a cold one. Therefore, the temperature of the cold fluid must be less than that of the hot fluid at all points along the length of the exchanger.

The process design hierarchy can be represented by the "onion diagram". The design starts with the reactors (in the "core" of the onion). Once feeds, products, recycle concentrations are known, the separators(the second layer of the onion) can be designed. The basic process heat and material balance is now in place, the heat

exchanger network (the third layer) can be designed. The remaining heating and cooling duties are handled by the utility system (the fourth layer). The process utility system may be a part centralized site-wide utility system.

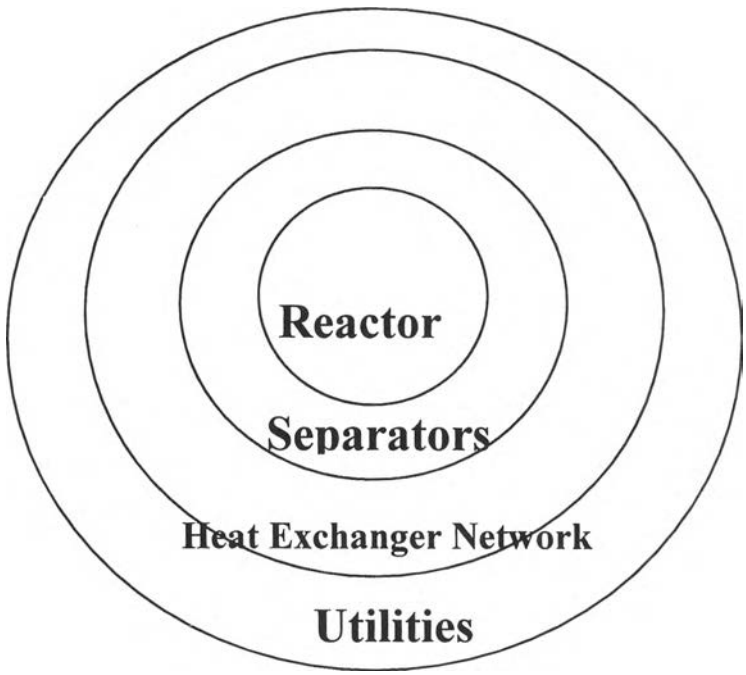

Figure 2.1 "Onion Diagram" of hierarchy in process design

A pinch analysis begins at the heat and material balance of the process. By using pinch technology, it is possible to identify appropriate changes in the core process conditions that can impact on energy saving (onion layers one and two). After the heat and material balances are defined, targets of energy saving can be set prior to design of the heat exchanger network. The pinch design method ensures that these targets are achieved during the network design. The targets can be set for the utility loads at various levels(e.g. steam and refrigeration levels). The utility levels supplied to the process may be a part of the centralized site-wide utility system (e.g. site steam system). Pinch technology can be extended to the site level, wherein appropriate loads on the various steam mains can be identified in order to minimize the site-wide energy consumption. Pinch technology provides a consistant methodology for energy saving, from the basic heat and material balances to the total site utility system.

หอสมุดกลาง สถาบันวิทยบริการ
จุฬาลงกรณ์มหาวิทยาลัย

This work is used for an applications of the pinch technology; column targeting.

2.2 The Column Targeting

In the pinch analysis work, the heat loads, such as reboilers, pumparounds and condensers are treated as heat sinks or sources. And the columns are analyzed for the heat flow in the columns, providing insights into heat integration strategies for energy saving. Most industrial distillation columns have certain inevitable losses or inefficiencies. In order to set realistic targets for the design modifications of these columns, for these losses are allowed. A practical near-minimum thermodynamic condition(PNMTC) for an "actual" column are developed. The Figure 2.2 illustrates the PNMTC. The PNMTC relates to a minimum loss condition after accepting the inevitable losses due to the practicalities of column design and modification. These losses include inevitable feed losses, losses due to sharp separation, chosen distillation configuration (e.g. multiple products, single column, side stripper, etc), pressure drop losses, etc. The column at PNMTC requires infinite stages and infinite side exchangers as shown in Figure 2.2.

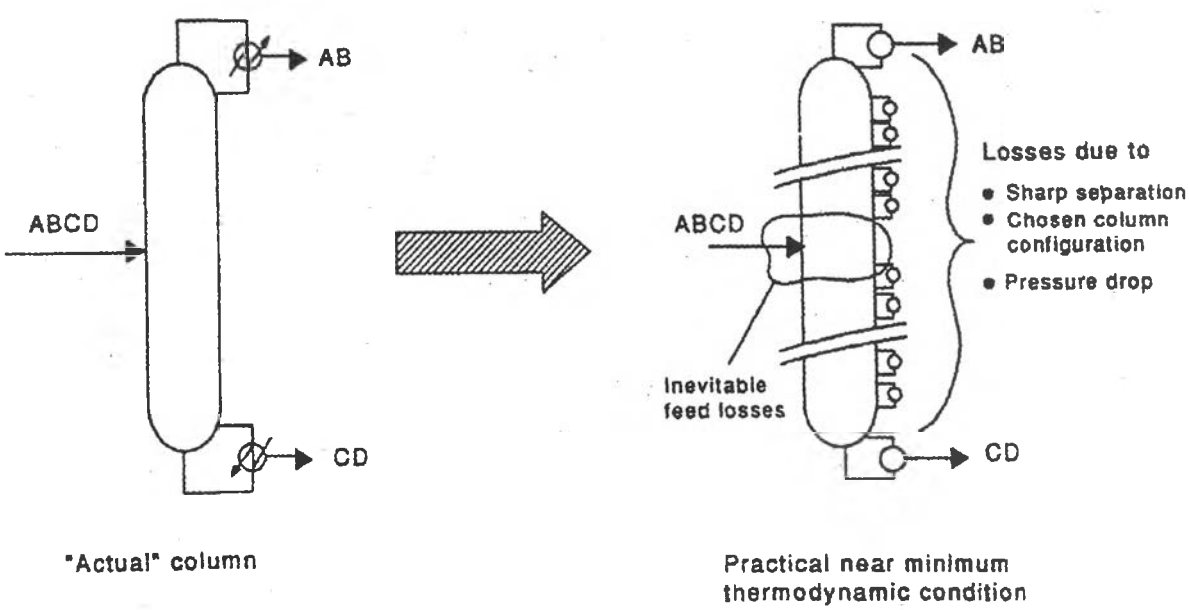

Figure 2.2. Practical near-minimum thermodynamic condition (PNMTC) (V.R Dhole and B. Linnhofff, 1993)

2.2.1 Generating the CGCC

The CGCC are generated by two different approaches; "Top down" and "Feed stage correction" approaches.

2.2.1.1 Top-down approach

Dhole and Linnhoff (1993) describe this approach for generating the CGCC from a converged simulation of the base-case distillation column and thus inherently account for the inevitable feed loss, pressure loss, sharp-separation loss, and loss due to configuration. This approach involves generating envelopes from top end of the column and evaluating the net enthalpy deficit at each stage after determining the minimum vapor and liquid flows through that storage.

The results from converged column simulations provide molar flows and compositions on a stage-by-stage basis. For multicomponent distillation, the pseudo-binary concept of light and heavy key model (Fonyo,1974; Dhile and Linnhoff, 1993) is used. The light and heavy key components are specified. Light non-key components are clubbed with the light key, and heavy non-key components with the heavy key.

For compositions of liquid and vapor streams emerging from the same stage are the equilibrium compositions at the stage temperature. Thus to solve the equilibrium line and the operating line equations simultaneously, the equilibrium compositions of vapor and liquid streams emerging from the same stage is incorporated in to mass balance equations.

For rectifying section

$$G_{min}\, Y^*_L - L_{min} X^*_L = D_L \qquad (1a)$$

$$G_{min}\, Y^*_H - L_{min} X^*_H = D_H \qquad (1b)$$

For striping section

$$G_{min}\, Y^*_L - L_{min} X^*_L = D_L - F_L \qquad (1c)$$

$$G_{min}\, Y^*_H - L_{min} X^*_H = D_H - F_H \qquad (1d)$$

These equations establish the minimum vapor flow (G_{min}) and the liquid flow (L_{min}) at the stage temperature under PNMTC.

In order to obtain the temperature-enthalpy representation for PNMTC, the minimum vapor and liquid flows are presented in terms of enthalpies.

The vapor and liquid streams emerging from the same stage are in equilibrium each other. The enthalpies of these equilibrium vapor and liquid streams are terms here as H^*_G and H^*_L , respectively. The enthalpies for the minimum vapor and liquid flows (H_{Gmin} and H_{Lmin}) are obtained from H^*_G and H^*_L by direct molar proportionality,

$$H_{Gmin} = H^*_G(G_{min}/G^*) \qquad (2a)$$

$$H_{Lmin} = H^*_L(L_{min}/L^*) \qquad (2b)$$

Where G* and L* represent the molar flows of the equilibrium vapor and liquid streams. After calculating H_{Gmin} and H_{Lmin} , enthalpy balances are set up at each of the stage temperatures and the net enthalpy deficits(H_{def}) are evaluated at each of these temperatures (See figure 2.3a).

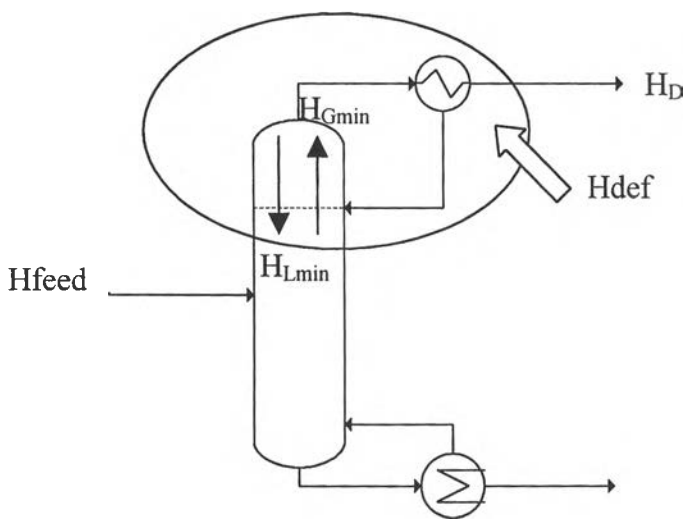

Figure 2.3a. Evaluating enthalpy deficit at a stage.

Thus the energy balance for an envelope before the feed stage (rectifying section) is:

$$H_{def} = H_{Lmin} - H_{Gmin} + H_D \qquad (3)$$

And the energy balance for an envelop at and after the feed stage (stripping section) is:

$$H_{def} = H_{Lmin} - H_{Gmin} + (H_D - H_{feed}) \qquad (4)$$

Figure 2.3b demonstrates how the individual enthalpy deficits are cascaded to construct the CGCC. The values of the stage Temperature and the corresponding heat deficits are plotted in the T-H dimension as shown. The feed enthalpy strongly influences the shape of the CGCC near the feed stage. The CGCC usually shows a pinch point near the feed stage.

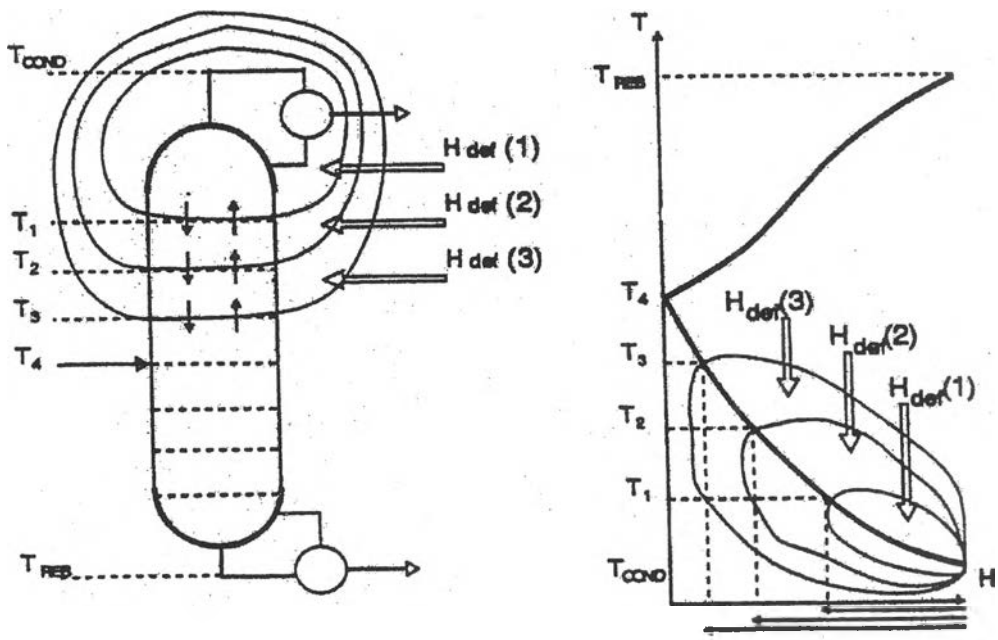

Figure 2.3b. Constructing the CGCC from stagewise enthalpy deficits. (V.R Dhole and B. Linnhofff, 1993)

To obtain CGCC, the minimum vapor flow (Gmin) and liquid flow (Lmin), at each stage temperature, are calculated by solving equation (1a) and (1b) simultaneously for rectifying section and equation (1c) and (1d) simultaneously for stripping section. These minimum flows are then expressed as equivalent enthalpy flows to obtain the net heat deficit (Hdef) at the stage temperature by equation 3 and 4. The heat deficits are calculated by using equation (5) where Qc is condenser duty in order to obtain the enthalpy. The CGCC can alternatively be plotted as stage number or temperature versus enthalpy (Figure 2.4). This version is particularly useful for identifying the appropriate feed condition.

$$H = Hdef + Qc \qquad (5)$$

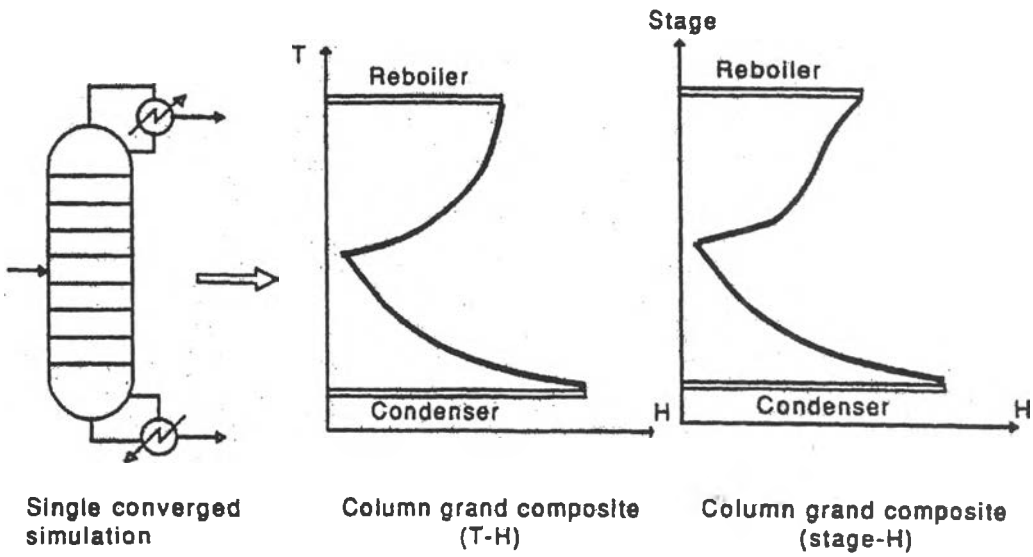

Figure 2.4.The CGCC from a single converged simulation.
(V.R Dhole and B. Linnhofff, 1993)

2.2.1.2 Feed stage correction approach (FSC)

It is clear from the top down approach that CGCC is uniquely defined at all stages except those with feeds. The ambiguity at the stages with feeds may be eliminated through a fundamental analysis of a feed stage as shown in Figure 2.5.

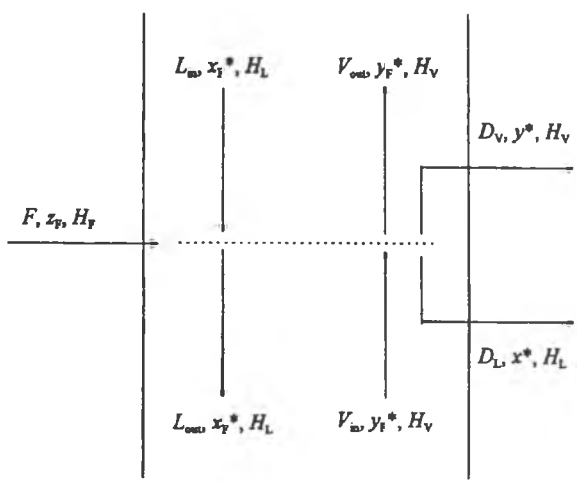

Figure 2.5 Fundamental analysis of a generalized feed stage with liquid and vapor products for PNMTC column. (S. Bandypadhayay *et al.*, 1998)

Figure 2.5 shows a feed stage (generalized to include liquid and vapor products) for a column operating at the PNMTC. The material, component and enthalpy balances at such a feed stage are as follows:

$$L_{in} + V_{in} + F = L_{out} + V_{out} + D_L + D_V \tag{6a}$$

$$L_{in}x_F^* + V_{in}y_F^* + Fz_F = L_{out}x_F^* + V_{out}y_F^* + D_L x^* + D_V y^* \tag{6b}$$

$$L_{in}H_L + V_{in}H_V + FH_F = L_{out}H_L + V_{out}H_V + D_L H_L + D_V H_V \tag{6c}$$

Equation (6a) and (6b) assume the composition and molar enthalpy changes of the saturated liquids and vapors over the feed stage are negligible. This assumption holds when the feed stage is pinched or the column is operating at PNMTC. Furthermore, in equation (6b) , the product compositions correspond to the equilibrium compositions(x*,y*) or the feed stage (for the simulated finite column operating at reflux greater than minimum reflux).

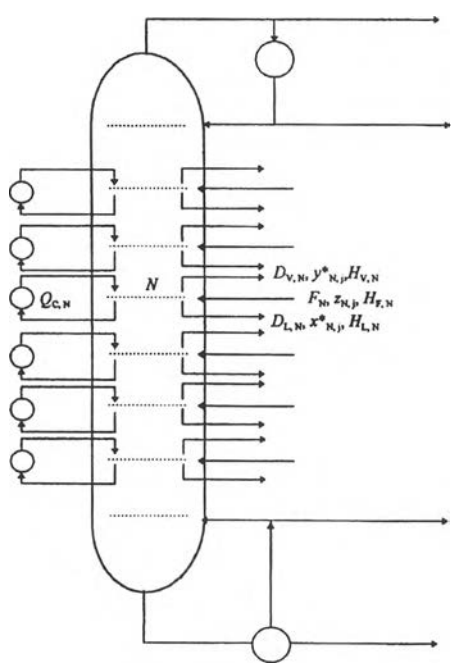

Figure 2.6 Distillation column with feed, liquid products, vapor products and side exchanger on every stage. (S. Bandypadhayay *et al.* , 1998)

The FSC approach for multi-component distillation column, the pseudo-relative volatility is determined from the pseudo-heavy and light keys. Thus x* and y* are calculated by summation over the light key components defined at a particular stage. The equations for computer implementation are provided that readily allow the generation of a CGCC for general case of a distillation column with a feed, a liquid product, a vapor product and side exchanger (side condenser or reboiler) on every stage as shown in (Figure 2.6) Equation (6a), (6b) and (6c) can be generalized for the N stages given below:

$$V_{min,N} + \sum_{i=1}^{N} F_i = L_{min,N} + \sum_{i=1}^{N} (D_{L,i} + D_{V,i}) \tag{7a}$$

$$V_{min,N} \sum_{j \in JL} y_{N,j}^{*} + \sum_{i=1}^{N} \sum_{j \in JL} (F_i z_{i,j}) = L_{min,N} \sum_{j \in JL} x_{N,j}^{*} + \sum_{i=1}^{N} \sum_{j \in JL} (D_{L,i} x_{i,j}^{*} + D_{V,i} y_{i,j}^{*}) \tag{7b}$$

$$V_{min,N} H_{V,N} + \sum_{i=1}^{N} (F_i H_{F,i}) + H_{def,N} = L_{min,N} H_{L,N} + \sum_{i=1}^{N} (D_{L,i} H_{L,i} + D_{V,i} H_{V,i}) \tag{7c}$$

where JL = {j if j^{th} component is light key on stage N) and stage numbering starts from the top of the column. The subscript i and j denote the ith stage and j^{th} components. The equation (7a) and (7b) are applied for Lmin and Vmin while $H_{def,N}$ can be calculated from equation (7c) and $H_{CGCC,N}$ can be determined from

$$H_{CGCC,N} = \sum_{i=1}^{N} Q_{C,i} + H_{def,N} \tag{8}$$

2.3 Composite Curve of the Background Process

The hot and cold streams in a process can be represented on a temperature-heat content (Enthalpy) graph once their input and output temperatures (or "supply" and "target" temperatures) and their flowrates and physical properties are known. Starting from the individual streams it is possible to construct one "composite curve" of all hot streams (streams that have to be cooled) in the process and another of all cold streams (streams that have to be heated), by simple addition of heat contents over the temperature ranges in the problem.

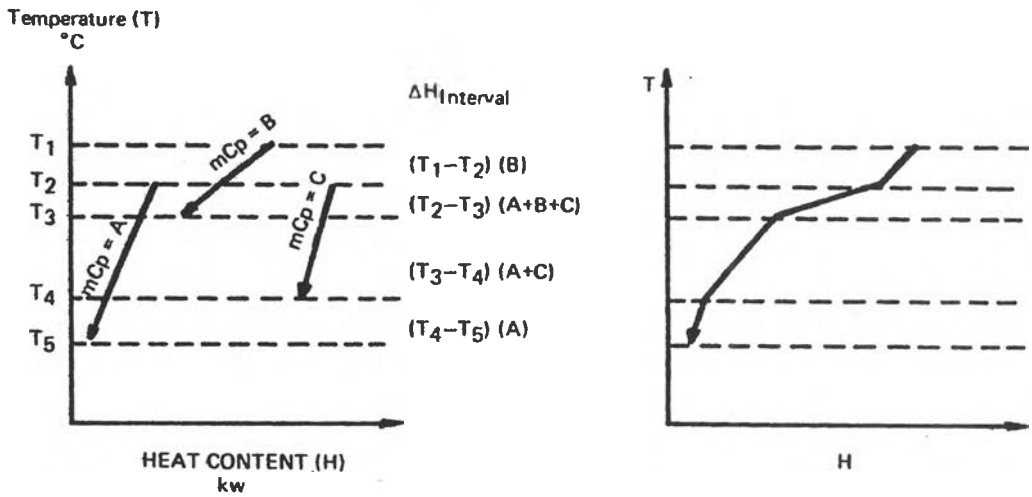

Figure 2.7 Construction of "Composite Curve". (B. Linnhofff *et al*, 1982)

The result for a set of hot and cold streams is a plot of two composite curves as shown in Figure 2.8. The overlap between the composite curve represents the maximum amount of heat recovery possible within the process.

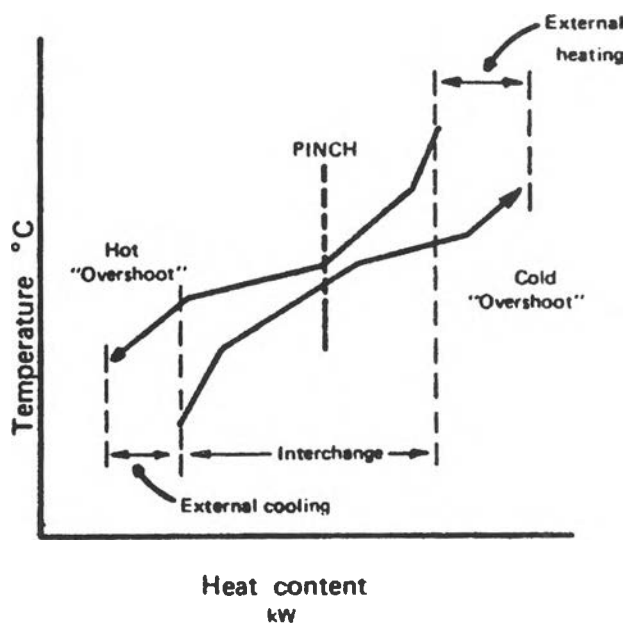

Figure 2.8 Prediction of energy targets using Composite Curve.
(B. Linnhofff *et al*, 1982)

The "over-shoot" of the hot composite represents the minimum amount of the external cooling required and the "overshoot" of the cold composite represents the minimum amount of external heating. Because of the "kinked" nature of the curve, they approach most closely at one point. This is called the "pinch".

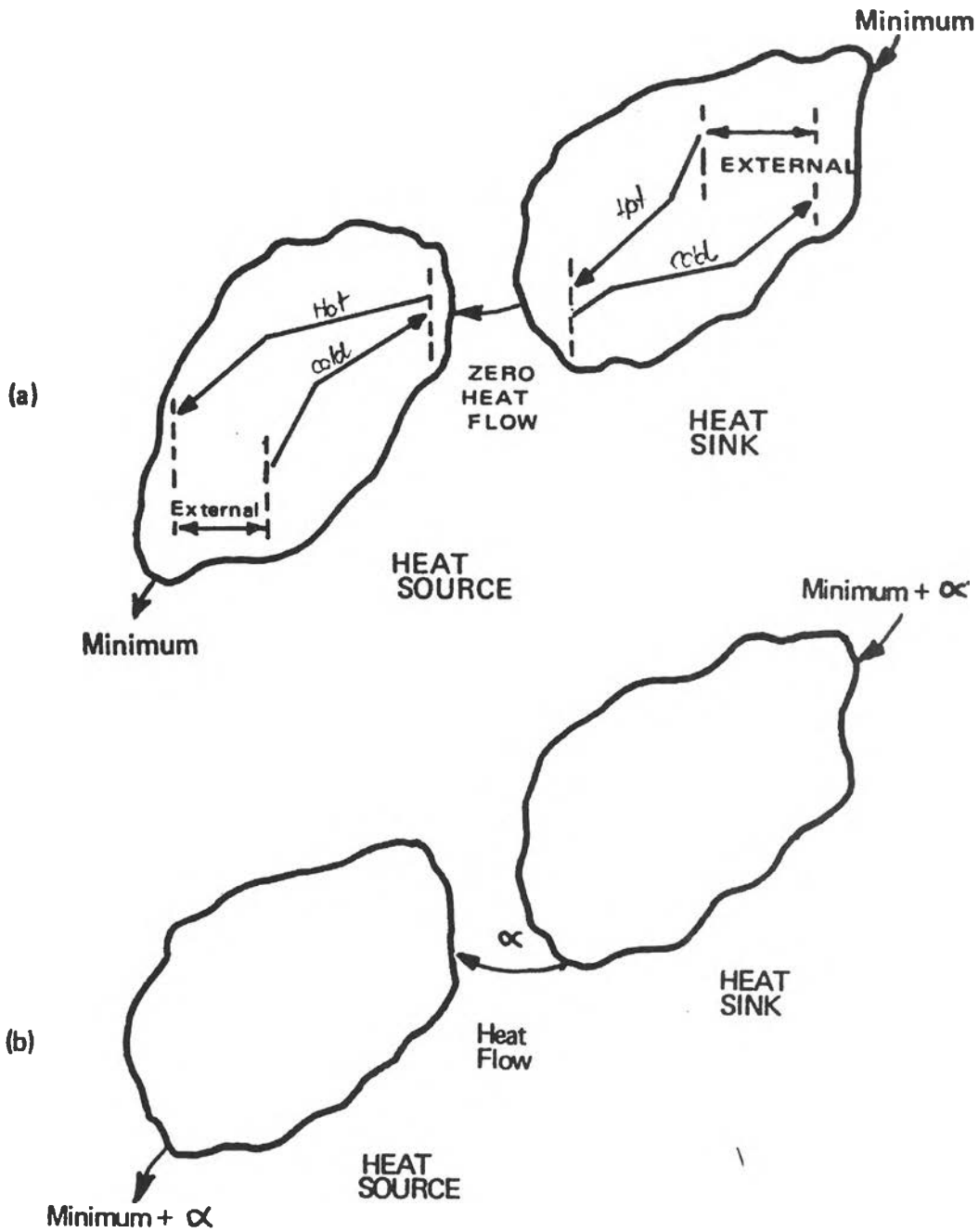

Figure 2.9 The source/sink characteristic of process heat exchanger. (B. Linnhofff *et al*, 1982)

In Figure 2.9 (a) the system is separated at the pinch. In the section above the pinch, the composite hot gives all its heat to the composite cold with only residual heating required. The system is therefore a heat sink. Heat goes in from hot utility, but no heat goes out. Conversely, below the pinch the system is a heat achieves the utility targets the heat flow across the pinch is zero. However, Figure 2.9 (b) shows the case where the minimum utility targets are not met. External heating is in excess (by α) of the minimum possible. By heat balance around the heat source and the heat sink, there must be a heat flow α across the pinch and an excess external cooling requirement α.

2.3.1 Energy Targets

Two stream heat exchanger- The temperature-heat content (Temperature-enthalpy) diagram can be used to represent the thermal characteristics of process streams, as illustrated in Figure 2.10. Differential heat flow dQ, when added to a process streams, will increase in its enthalpy (H) by CP.dT, where:

CP = "heat capacity flowrate"(kW/K) = mass flow (kg/sec) x specific heat (kJ/kgK)

dT = differential temperature change

Hence, with CP assumed contant, for a stream requiring heating ("cold" stream) from a " supply temperature"(Ts) to a "target temperature"(T_T), the total heat added will be equal to the stream enthalpy change, i.e.

$$Q = \int_{T_s}^{T_T} CP.dT = CP(T_T - T_s) = \Delta H \qquad (10)$$

and the slope of the line representing the stream is

$$\frac{dT}{dQ} = \frac{1}{CP} \qquad (11)$$

The T/H diagram can be used to represent heat exchanger, because of a very useful feature. Namely, since we are only interested in enthalpy changes of streams, a given stream can be plotted anywhere on the enthalpy axis. Provided it has the same slope and runs between the same target temperatures, then where it is drawn on the H-axis, it represents the same stream.

Composite curves-Heat exchanger between many hot and many cold streams can be analyzed similarly. A single composite of all hot and a single composite of all cold streams can be produced in the T/H diagram, and handled in just the same way as the two-stream problem.

In Figure 2.10 (a) three hot streams are plotted separately, with their supply and target temperatures defining a series of "interval" temperatures T_1 to T_5. Between T_1 and T_2, only stream B exists, and so the heat available in this interval is given by $CP_B(T1-T2)$. However between T_2 and T_3, all three streams exist and so the heat available in this interval is $(CP_A+CP_B+CP_C)(T_2-T_3)$. A series of values of ΔH for each interval can be obtained in this way, and the result re-plotted against the interval temperatures as shown in figure 2.10 (b). The resulting T/H plot is a single curve representing all the hot streams. A similar procedure gives a composite of all cold streams in problem.

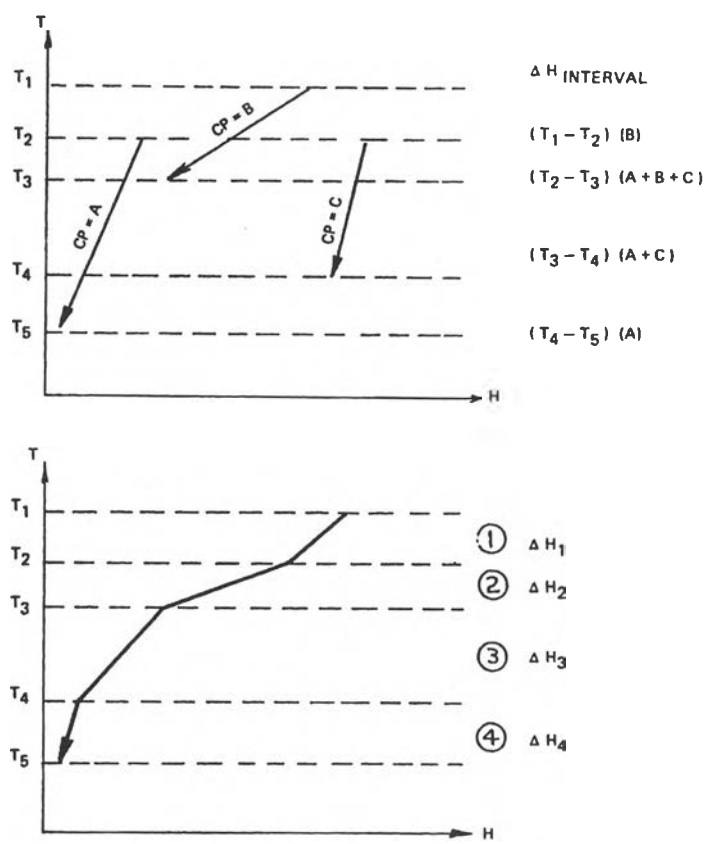

Figure 2.10 Construction of Composite Curve. (B. Linnhofff *et al*, 1982)

Figure 2.11 shows a typical pair of composite curves. Shifting of the curves leads to behavior similar to that shown by the two-stream problem. Now, through, the "kinked" nature of the composites means that ΔT_{min} can occur anywhere in the interchange region and not just at one end. For a given value ΔT_{min}, the utility quantities predicted are the minima required to solve the heat recovery problem. Note that although many streams in the problem, in general ΔT_{min} occurs at only one point, termed the "pinch". This means that it is possible to design a network which uses the minimum utility requirements, where only the heat exchangers at the pinch need to operate at ΔT values down to Δ_{Tmin}.

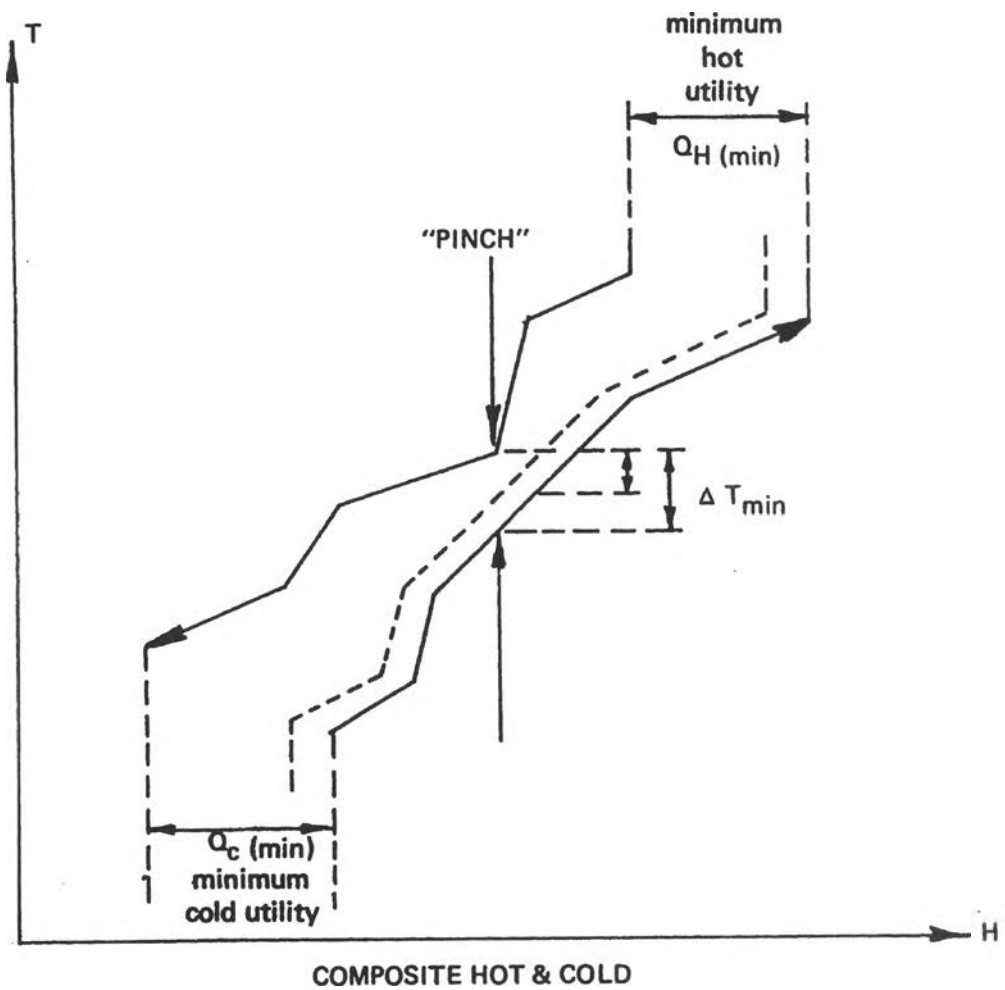

Figure 2.11 Energy Targets and "the pinch" with Composite Curves. (B. Linnhofff *et al*, 1982)

2.4 Process Integration

Process heat and power integration has a significant impact on the overall process design. Therefore, it cannot be considered in isolation. It must be considered as an integral part of the system design or "synthesis". Many decomposition schemes have been proposed to break down the design of chemical process systems into subsystems, promoting a systematic and structured approach to synthesis.

For the background process, Figure 2.12 shows the overlap of the example column (as a "box") and the background process. The CGCC has been plotted in the reverse enthalpy direction (from right to left). One might reduce the column pressure to avoid overlap. However, considering the CGCC, we identify reflux and preheating modifications as appropriate. The use of column targets makes the designer fully aware of modification potential, either for stand alone column design or for process integration.

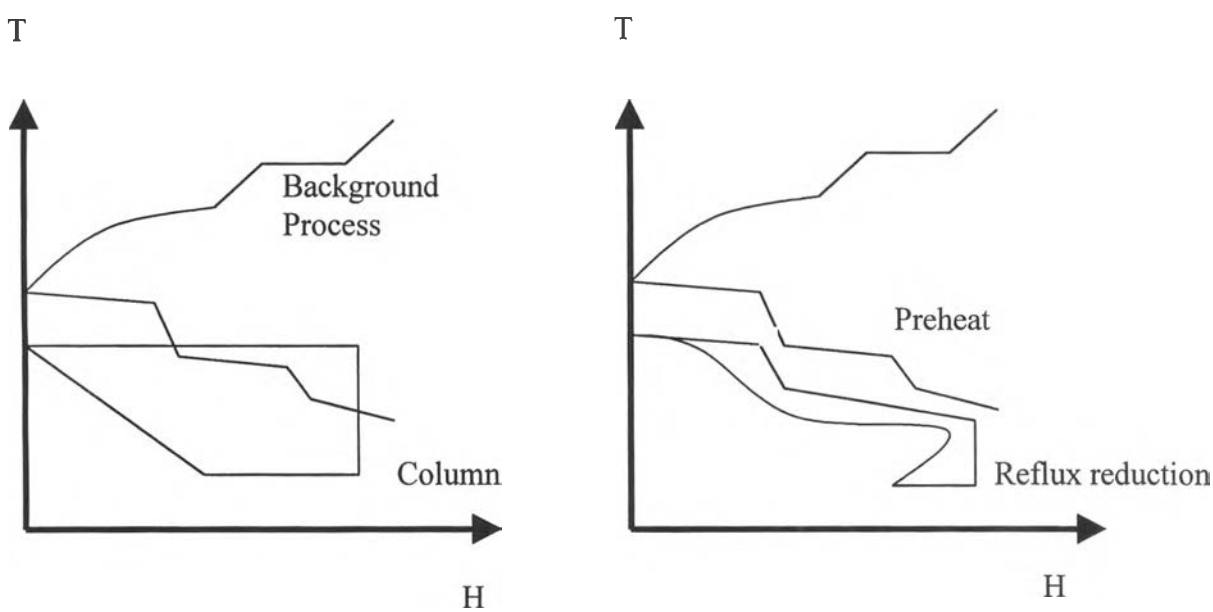

"Box" representation **"Profile" representation**

Figure 2.12. Example problem process integration.

2.5 Literature Survey

Terranova *et al.* (1989) showed how to establish heating and cooling curves for distillation columns featuring interheating and intercooling. The approach is to construct a diagram plotting column temperatures versus reboiler and condenser duties. No assumptions are needed on ideal behavior. The advantage of interheating and intercooling is that the heat is added or removed at a temperatures between reboiler and condenser temperature. Thus, heat can be added at a temperature lower than the reboiler temperature, or removed at a temperature higher than the condenser temperature.

Stankiewicz S.(1993) found that Pinch technology(PT) became more important way for engineers to optimize chemical processes. By allowing engineers to track the heat or pressure flow of all process streams, PT made it easier to integrate plant design. Rearranging equipments, such as reactors, evaporators, pumps, distillation columns, and separators, can make unit operations more efficient energy consumption.

Dhole *et al.* (1993) studied the design of distillation columns. In particular, it relates to optimization of a base case design. Column optimization involves options such as different reflux ratios, pressure, side condensing/reboiling and feed preheating /cooling. They aim to establish heat loads and temperature level for such modifications and identify the best combined method. This research presents a methodology based on a combination of thermodynamics and practical aspects of column modification. The methodology gives the engineer targets for design options ahead of design. In addition, it provides targets for the best combination of options.

Trivedi *et al.* (1996) found a procedure that Pinch technology was used to optimize a licensor's design for complex processes with many utilities and unit operations. The procedure included a method to set the marginal cost for various utility levels. It also illustrated how to use composite and grand composite curves to set the level and load of various. In addition, the method optimizes distillation column using the concepts of column grand composite curves.

Koehler *et al.* (1995) studied the minimum energy requirement of distillation sets a lower thermodynamically defined operating limit, which is increasingly important in practical due to growing interest in energy saving. During the conceptual design phase this energy information can be compared with distillation configurations.

Agrawal *et al.* (1996) studied advantages of intermediate reboiler in the stripping section of a distillation column and an intermediate condenser in the rectifying section are well-known. For highly nonideal mixtures the distillation process can be improved by placing an intermediate reboiler in the rectifying section of column or an intermediate condenser in the stripping section, which is counterintuitive. In consequence the more expensive heating utility used in bottom reboiler can be replaced with a less expensive heating medium (at lower temperature) used in the intermediate reboiler. Similarly, a portion of the condensing duty from the top condenser can be replaced with the less expensive condensing duty (at a higher temperature) in the intermediate condenser. This replacement of reboilers (condensers) can be used to reduce the total number stages in the distillation column with a lower (higher) level of utility. Operating and capital costs of the distillation process with an intermediate heat exchanger can be lower than those for a classic column.

Bandypadhyay *et al.* (1998) found the temperature-enthalpy (T-H) diagram of distillation column at practical near-minimum thermodynamic condition(PNMTC) or the column grand composite curve (CGCC); is a useful tool for energy targeting studies. It was generated from a converged simulation of a base-case column design. The calculation procedure for CGCC involves determination of the net enthalpy deficit at each stage by generating envelopes from either the condenser end (top-down approach) or the reboiler end (bottom-up approach).The net enthalpy deficits at feed stage calculated by both approaches are erroneous even for the simplest case of binary distillation. A feed stage correction (FSC) is proposed to resolve the discrepancy.

Bandypadhyay *et al.* (1999) studied invariant rectifying-stripping (IRS) curves which was independent of the feed location and operating reflux of the distillation column for a given separation problem. IRS curves represent the enthalpy surpluses and deficits in the rectifying and stripping sections, respectively, as a function of temperature for all possible values of reflux and reboil. The IRS curves provide a new representation on the temperature-enthalpy diagram to set distillation column targets prior to detailed design for minimum energy requirement, feed location, feed preconditioning and side-exchanger loads.